Centre Number	Candidate Number

Candidate Name _____

CAMBRIDGE INTERNATIONAL EXAMINATIONS

General Certificate of Education Advanced Subsidiary Level and Advanced Level

PHYSICS

9702/2

PAPER 2

MAY/JUNE SESSION 2002

1 hour

Candidates answer on the question paper.
No additional materials.

TIME 1 hour

INSTRUCTIONS TO CANDIDATES

Write your name, Centre number and candidate number in the spaces at the top of this page.

Answer **all** questions.

Write your answers in the spaces provided on the question paper.

INFORMATION FOR CANDIDATES

The number of marks is given in brackets [ ] at the end of each question or part question.

You may lose marks if you do not show your working or if you do not use appropriate units.

FOR EXAMINER'S USE

This question paper consists of 15 printed pages and 1 blank page.

© CIE 2002

UNIVERSITY of CAMBRIDGE
Local Examinations Syndicate

[Turn over

Data

speed of light in free space,	$c = 3.00 \times 10^{8}\ \text{m s}^{-1}$
permeability of free space,	$\mu_0 = 4\pi \times 10^{-7}\ \text{H m}^{-1}$
permittivity of free space,	$\epsilon_0 = 8.85 \times 10^{-12}\ \text{F m}^{-1}$
elementary charge,	$e = 1.60 \times 10^{-19}\ \text{C}$
the Planck constant,	$h = 6.63 \times 10^{-34}\ \text{J s}$
unified atomic mass constant,	$u = 1.66 \times 10^{-27}\ \text{kg}$
rest mass of electron,	$m_e = 9.11 \times 10^{-31}\ \text{kg}$
rest mass of proton,	$m_p = 1.67 \times 10^{-27}\ \text{kg}$
molar gas constant,	$R = 8.31\ \text{J K}^{-1}\ \text{mol}^{-1}$
the Avogadro constant,	$N_A = 6.02 \times 10^{23}\ \text{mol}^{-1}$
the Boltzmann constant,	$k = 1.38 \times 10^{-23}\ \text{J K}^{-1}$
gravitational constant,	$G = 6.67 \times 10^{-11}\ \text{N m}^2\ \text{kg}^{-2}$
acceleration of free fall,	$g = 9.81\ \text{m s}^{-2}$

Formulae

uniformly accelerated motion, $s = ut + \frac{1}{2}at^2$
$v^2 = u^2 + 2as$

work done on/by a gas, $W = p\Delta V$

gravitational potential, $\phi = -\frac{Gm}{r}$

simple harmonic motion, $a = -\omega^2 x$

velocity of particle in s.h.m., $v = v_0 \cos \omega t$
$v = \pm \omega \sqrt{(x_0^2 - x^2)}$

resistors in series, $R = R_1 + R_2 + \ldots$

resistors in parallel, $1/R = 1/R_1 + 1/R_2 + \ldots$

electric potential, $V = \frac{Q}{4\pi\epsilon_0 r}$

capacitors in series, $1/C = 1/C_1 + 1/C_2 + \ldots$

capacitors in parallel, $C = C_1 + C_2 + \ldots$

energy of charged capacitor, $W = \frac{1}{2}QV$

alternating current/voltage, $x = x_0 \sin \omega t$

hydrostatic pressure, $p = \rho g h$

pressure of an ideal gas, $p = \frac{1}{3}\frac{Nm}{V}\langle c^2 \rangle$

radioactive decay, $x = x_0 \exp(-\lambda t)$

decay constant, $\lambda = \frac{0.693}{t_{\frac{1}{2}}}$

critical density of matter in the Universe, $\rho_0 = \frac{3H_0^2}{8\pi G}$

equation of continuity, $Av =$ constant

Bernoulli equation (simplified), $p_1 + \frac{1}{2}\rho v_1^2 = p_2 + \frac{1}{2}\rho v_2^2$

Stokes' law, $F = Ar\eta v$

Reynolds' number, $R_e = \frac{\rho v r}{\eta}$

drag force in turbulent flow, $F = Br^2\rho v^2$

[Turn over

For Examiner's Use

Answer **all** the questions in the spaces provided.

1 Make reasonable estimates of the following quantities.

(a) mass of an apple

mass = ... kg [1]

(b) number of joules of energy in 1 kilowatt-hour

number = ... [1]

(c) wavelength of red light in a vacuum

wavelength = ... m [1]

(d) pressure due to a depth of 10 m of water

pressure = ... Pa [1]

2 A student uses a micrometer screw gauge to measure the diameter of a wire. He fails to notice that, with the gauge fully closed, the reading is not zero.

(a) State and explain whether the omission introduces a random error or a systematic error into the readings of the diameter.

.....

.....[2]

(b) Explain why the readings are precise but not accurate.

.....

.....

.....[2]

For Examiner's Use

3 **(a)** Explain what is meant by the *centre of gravity* of an object.

.....

.....

.....[2]

(b) A non-uniform plank of wood XY is 2.50 m long and weighs 950 N. Force-meters (spring balances) A and B are attached to the plank at a distance of 0.40 m from each end, as illustrated in Fig. 3.1.

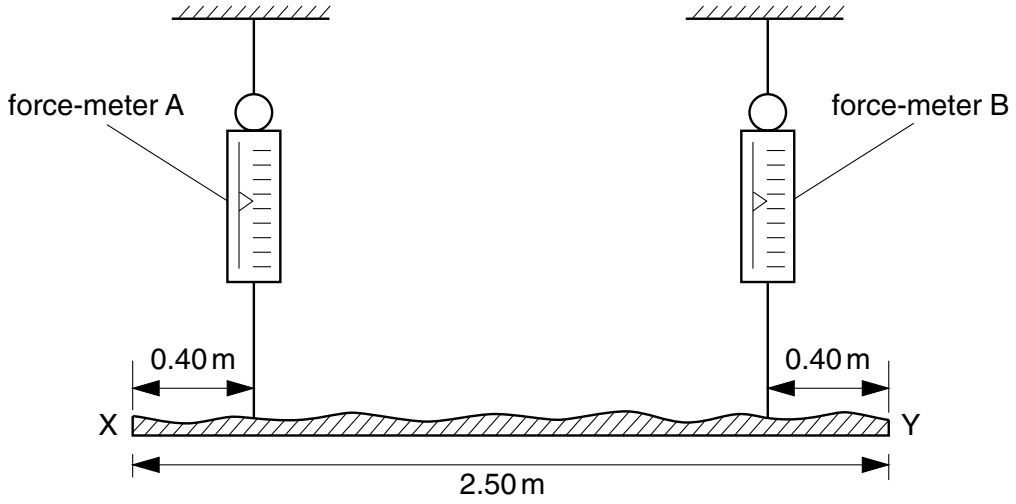

Fig. 3.1

When the plank is horizontal, force-meter A records 570 N.

(i) Calculate the reading on force-meter B.

reading = ... N

(ii) On Fig. 3.1, mark a likely position for the centre of gravity of the plank.

(iii) Determine the distance of the centre of gravity from the end X of the plank.

distance = ... m

[6]

[Turn over

For Examiner's Use

4 A steel ball of mass 73 g is held 1.6 m above a horizontal steel plate, as illustrated in Fig. 4.1.

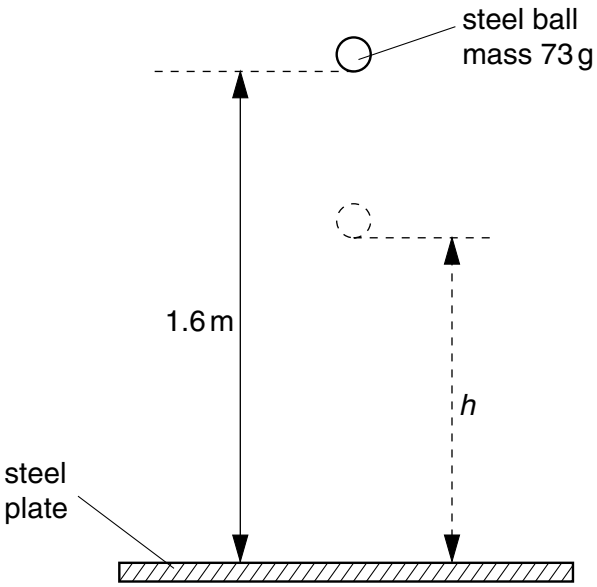

Fig. 4.1

The ball is dropped from rest and it bounces on the plate, reaching a height *h*.

(a) Calculate the speed of the ball as it reaches the plate.

speed = ... $m\,s^{-1}$ [2]

(b) As the ball loses contact with the plate after bouncing, the kinetic energy of the ball is 90% of that just before bouncing. Calculate

(i) the height *h* to which the ball bounces,

h = ... m

(ii) the speed of the ball as it leaves the plate after bouncing.

speed = ... $m\,s^{-1}$

[4]

(c) Using your answers to **(a)** and **(b)**, determine the change in momentum of the ball during the bounce.

change = ... N s [3]

(d) With reference to the law of conservation of momentum, comment on your answer to **(c)**.

.....

.....

.....[3]

For Examiner's Use

5 Some gas is contained in a cylinder by means of a moveable piston, as illustrated in Fig. 5.1.

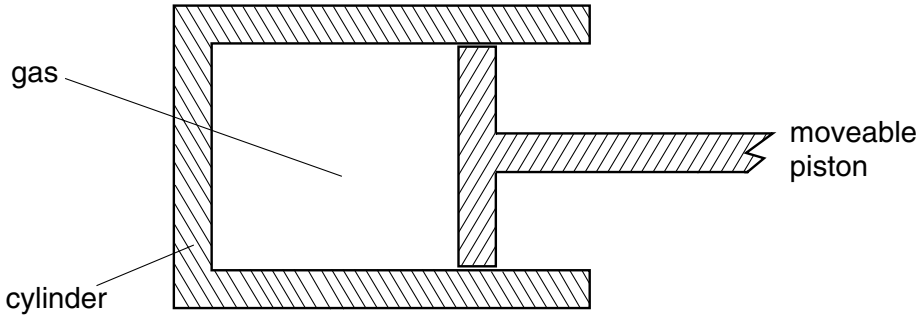

Fig. 5.1

State how, for this mass of gas, the following changes may be achieved.

(a) increase its gravitational potential energy

.....[1]

(b) decrease its internal energy

.....

.....[1]

(c) increase its elastic potential energy

.....

.....[1]

6 Two horizontal metal plates are situated 1.2 cm apart, as illustrated in Fig. 6.1.

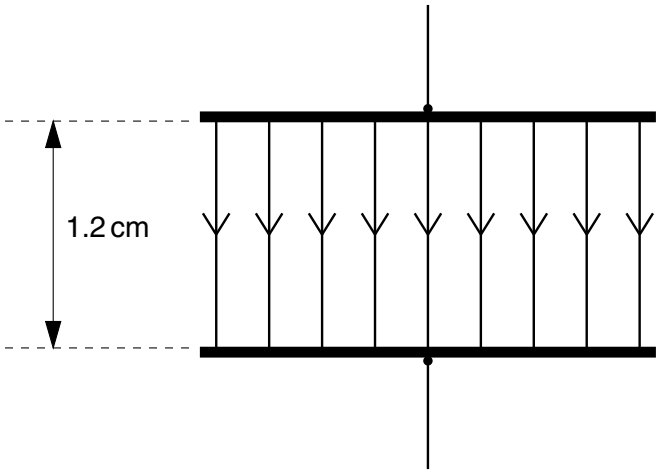

Fig. 6.1

The electric field between the plates is found to be 3.0×10^4 N C^{-1} in the downward direction.

(a) (i) On Fig. 6.1, mark with a + the plate which is at the more positive potential.

(ii) Calculate the potential difference between the plates.

potential difference = ... V

[3]

(b) Determine the acceleration of an electron between the plates, assuming there is a vacuum between them.

acceleration = ... m s^{-2} [3]

7 **(a)** Figs. 7.1(a) and (b) show plane wavefronts approaching a narrow gap and a wide gap respectively.

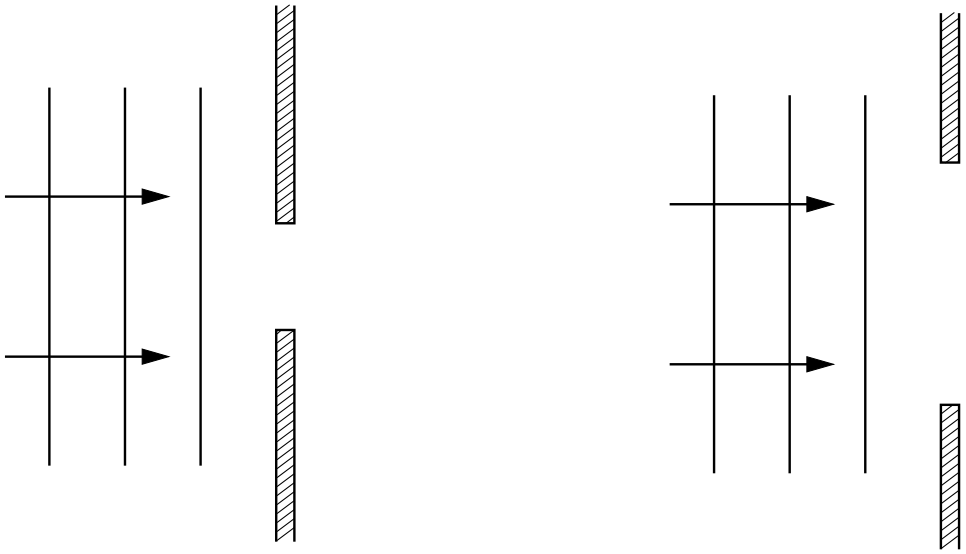

(a) **(b)**

Fig. 7.1

On Figs. 7.1(a) and (b), draw three successive wavefronts to represent the wave after it has passed through each of the gaps. [5]

(b) Light from a laser is directed normally at a diffraction grating, as illustrated in Fig. 7.2.

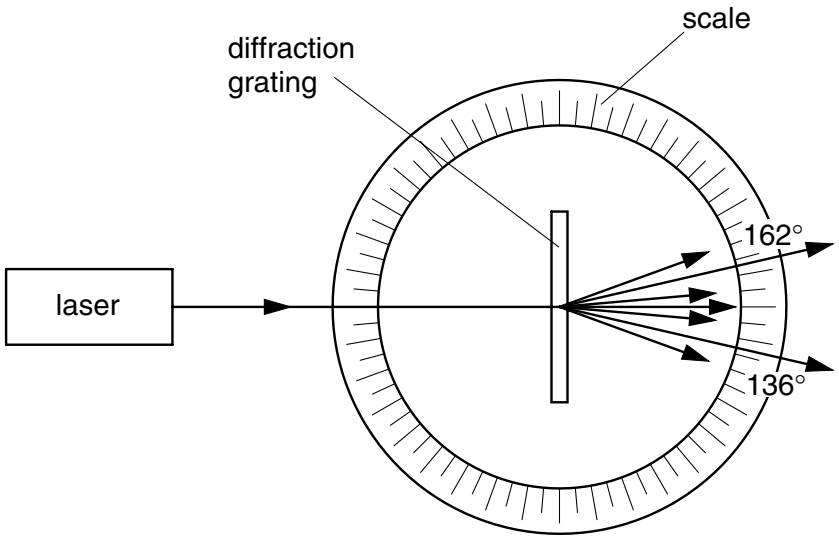

Fig. 7.2

The diffraction grating is situated at the centre of a circular scale, marked in degrees. The readings on the scale for the second order diffracted beams are 136° and 162°.

The wavelength of the laser light is 630 nm.

Calculate the spacing of the slits of the diffraction grating.

spacing = ... m [4]

(c) Suggest one reason why the fringe pattern produced by light passing through a diffraction grating is brighter than that produced from the same source with a double slit.

.....

.....[1]

8 A student has available some resistors, each of resistance 100 Ω.

(a) Draw circuit diagrams, one in each case, to show how a number of these resistors may be connected to produce a combined resistance of

(i) 200 Ω,

(ii) 50 Ω,

(iii) 40 Ω.

[4]

(b) The arrangement of resistors shown in Fig. 8.1 is connected to a battery.

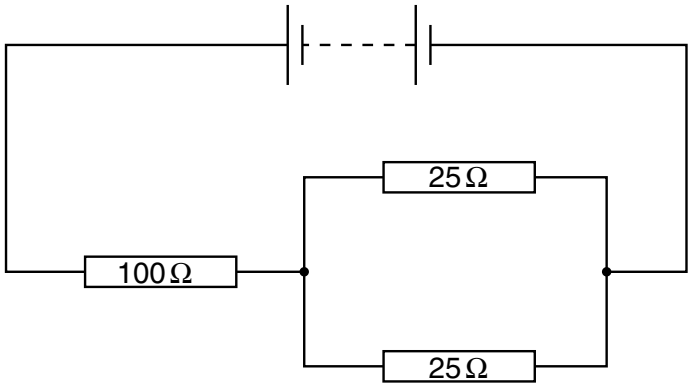

Fig. 8.1

The power dissipation in the 100 Ω resistor is 0.81 W. Calculate

(i) the current in the circuit,

current = ... A

(ii) the power dissipation in each of the 25 Ω resistors.

power = ... W

[4]

9 The radiation from a radioactive source is detected using the apparatus illustrated in Fig. 9.1.

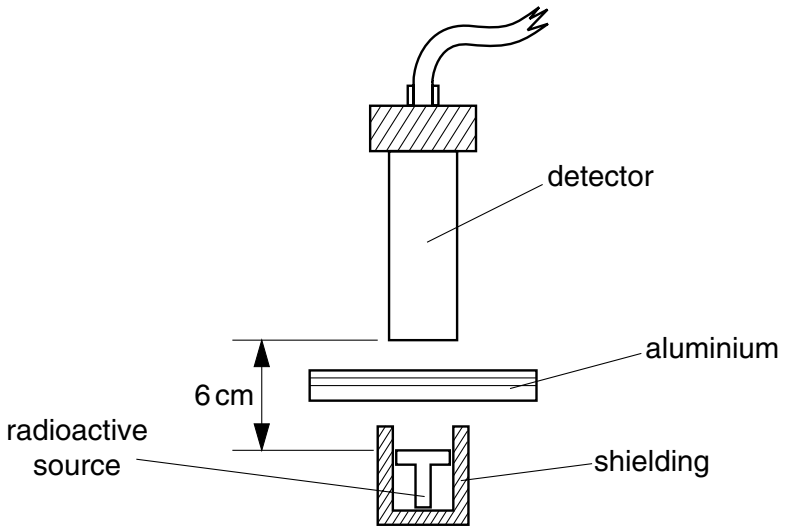

Fig. 9.1

Different thicknesses of aluminium are placed between the source and the detector. The count rate is obtained for each thickness. Fig. 9.2 shows the variation with thickness *x* of aluminium of the count rate.

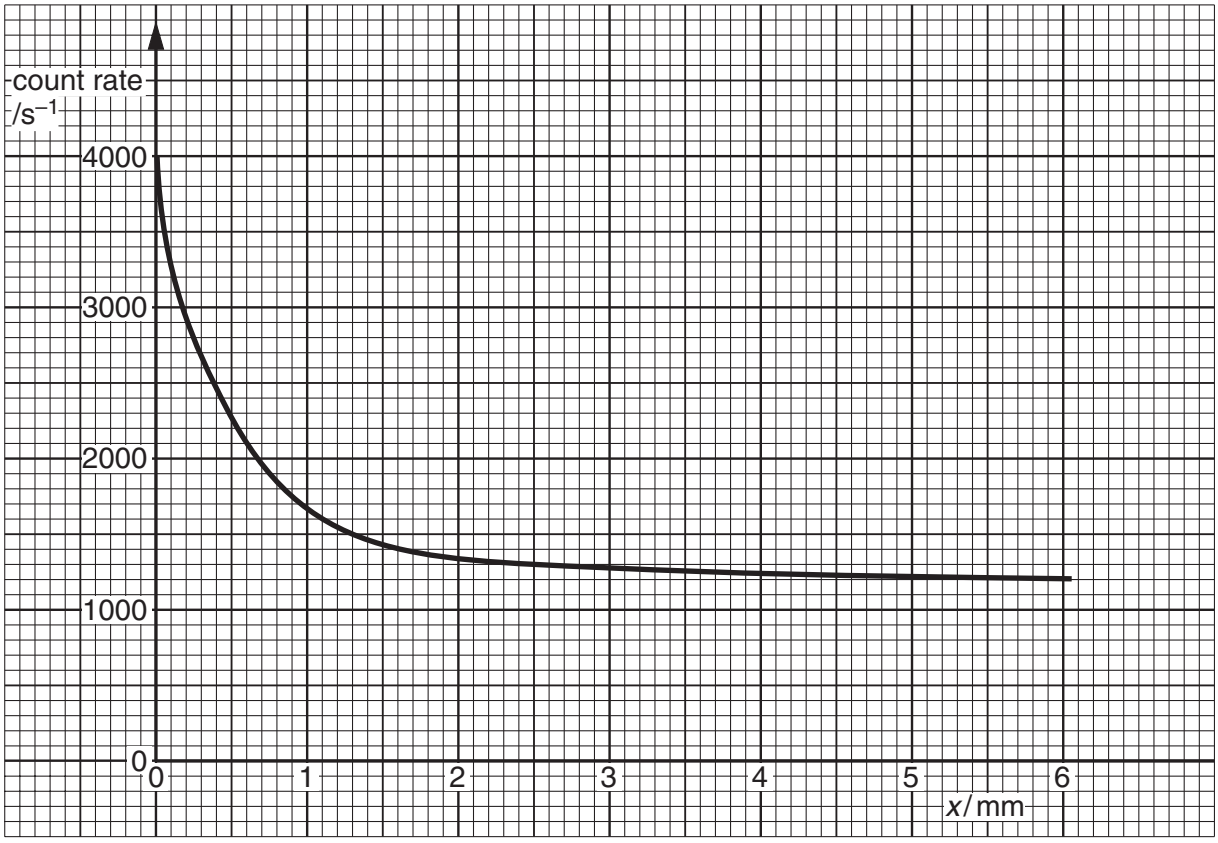

Fig. 9.2

(a) Suggest why it is not possible to detect the presence of the emission of α-particles from the source.

.....

.....[1]

(b) State the evidence provided on Fig. 9.2 for the emission from the source of

(i) β-particles,

.....

.....

.....

(ii) γ-radiation.

.....

.....

.....
[4]

BLANK PAGE